SPECIFICATION

ELECTRIC TELETRUK | 30-19E, 30-22E HL, 35-22E

Max capacity: 3000-3500kg Max capacity at 2m reach: 1900-2200kg Max lift height: 4360mm

100% electric. Zero emissions.

JCB is leading the way in clean technology and reducing harmful emissions. That's why we are introducing JCB E-TECH, a new generation of electric products with zero emissions at point of use that don't compromise on performance. The JCB electric Teletruk is the world's most versatile counterbalance forklift. Unique forward reach allows single side truck, van and container loading and unloading.

GREATER SAFETY.

With superb visibility and precision control, the Teletruk makes all operators feel in total control within any environment and in any application.

GREATER VERSATILITY.

With forward reach, low height and small turning circle, the unique JCB electric Teletruk is the world's most versatile counterbalance lift truck.

GREATER PRODUCTIVITY.

With a choice of two models, the new JCB electric Teletruk range is designed to make the most of your time and space.

GREATER CARE.

With zero emissions and low noise, both electric Teletruk models are ideal for 24/7 operation in urban environments and noise sensitive areas.

GREATER COMFORT.

The latest JCB CommandPlus cab ensures superior operator comfort throughout the working day, enabling you to gain maximum productivity.

STATIC DIMENSIONS

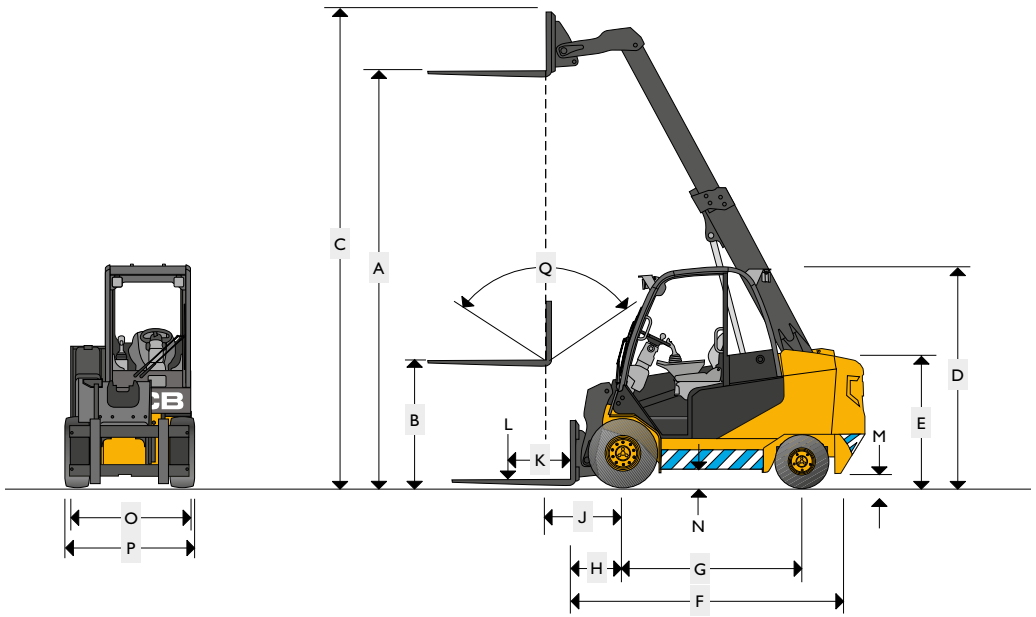

LIFT CAPACITIES

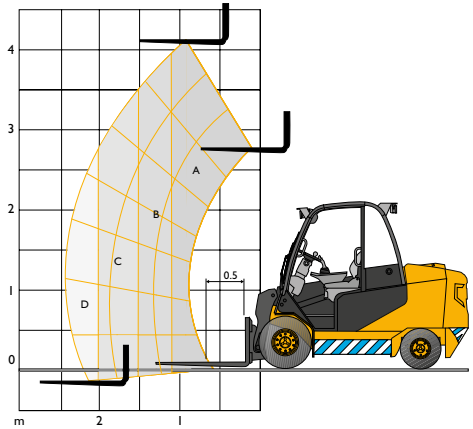

Capacity bands	30-19E	30-22E HL	35-22E
A	3000 kg	3000 kg	3500 kg
B	2500 kg	2500 kg	3000 kg
C	1900 kg	2275 kg	2200 kg
D	1600 kg	1900 kg	1800 kg
@ 2 metres	1900 kg	2200 kg	2200 kg

STATIC DIMENSIONS

	Model		TLT 30-19E	TLT 30-22E HL	TLT 35-22E
A	Max Lift height	mm	4000	4360	4000
B	Free lift (standard)	mm	1575	1575	1575
C	Height (boom extended)	mm	4625	4985	4625
D	Height of overhead guard (standard/low)	mm	2245	2245	2245
E	Height of operators seat	mm	1195	1195	1195
F	Length to fork face	mm	2983	3271	3038
G	Wheel base	mm	1802	1802	1802
H	Distance from c/l of front axle to fork face	mm	530	778	530
J	Distance from c/l of front axle to fork face (full height)	mm	705	858	705
K	Load centre	mm	500	500	500
L	Lift capacities (with sideshift)	kg	3000	3000	3500
M	Ground clearance (lowest point)	mm	120	120	120
N	Ground clearance (wheelbase centre)	mm	141	141	141
O	Fork carriage width	mm	1200	1200	1200
P	Maximum width of machine	mm	1300	1300	1300
Q	Carriage tilt total	degrees	111	111	111

GENERAL SPECIFICATION

Model		TLT 30-19E	TLT 30-22E HL	TLT 35-22E
Working pressure attachments	bar	260	260	260
Oil flow for attachments (standard / high)	lpm	28/70	28/70	28/70
Maximum reach ground level (500mm load centre)	mm	2230	2692	2230
Maximum reach boom horizontal (500mm load centre)	mm	2390	2860	2390
Turning radius (Over tyre)	mm	2467	2467	2467
Aisle width 90 stacking 1000x1200		4488	4776	4543
Weight unladen	kg	5600	5950	5950
Travel speed (standard)	kph	18	18	18
Gradeability (unladen)		21	21	21
Transmission		ELECTRIC	ELECTRIC	ELECTRIC
Park brake type		HAND	HAND	HAND
Tyres PPS (Semi solid) P (Pneumatic) F (Foam)		PPS/P/F	PPS/P/F	PPS/P/F
Tyre size front (standard)		27x10x12	27x10x12	27x10x12
Tyre size rear (standard)		21x8x9	21x8x9	21x8x9

100% electric. Zero emissions.

Your nearest JCB dealer

31839 en-GB 06/24 Issue 3

ELECTRIC TELETRUK 30-19E, 30-22E HL, 35-22E

Max capacity: 3000-3500kg Max capacity at 2m reach: 1900-2200kg Max lift height: 4360mm

JCB Sales Limited, Rocester, Staffordshire, United Kingdom ST14 5JP.
Tel: +44 (0)1889 590312 Email: salesinfo@jcb.com
Download the very latest information on this product range at: www.jcb.com

©2024 JCB Sales. All rights reserved. No part of this publication may be reproduced, stored in a retrieval system, or transmitted in any form or by any other means, electronic, mechanical, photocopying or otherwise, without prior permission from JCB Sales. All references in this publication to operating weights, sizes, capacities and other performance measurements are provided for guidance only and may vary dependant upon the exact specification of machine. They should not therefore be relied upon in relation to suitability for a particular application. Guidance and advice should always be sought from your JCB Dealer. JCB reserves the right to change specifications without notice. Illustrations and specifications shown may include optional equipment and accessories. All images are correct at time of print. The JCB logo is a registered trademark of J C Bamford Excavators Ltd.